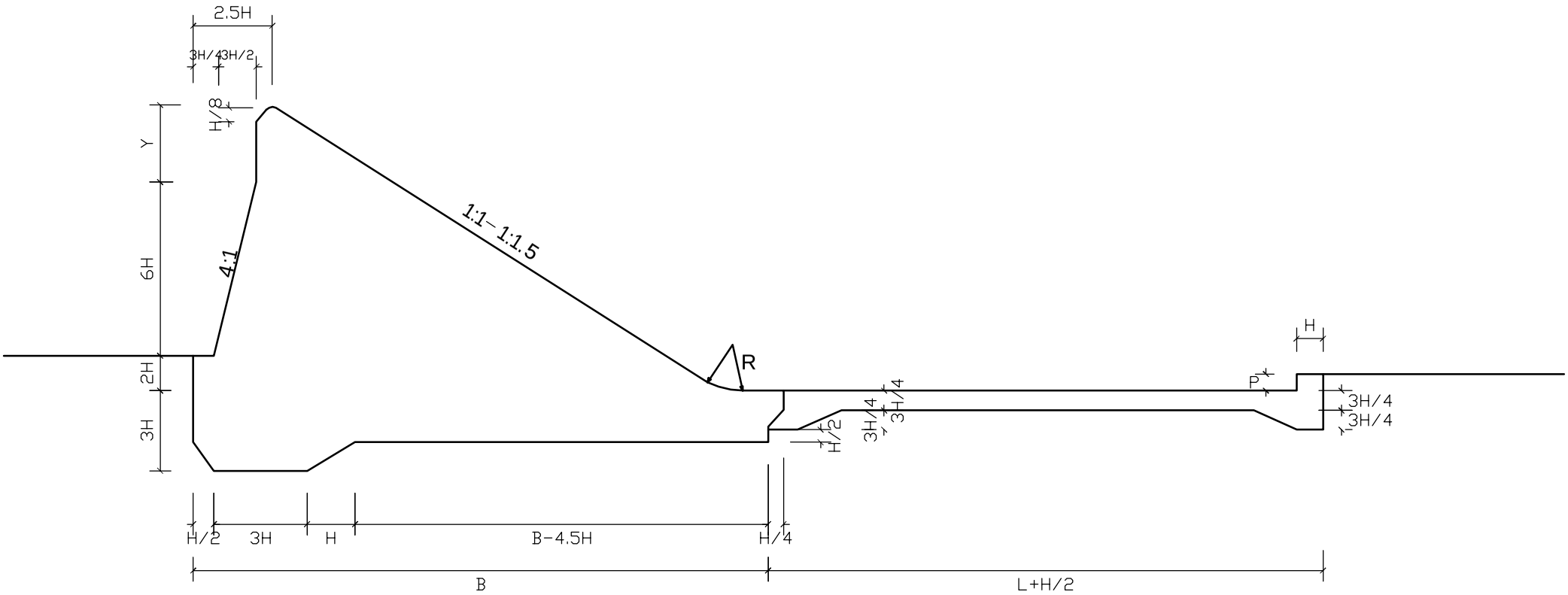
2.5H
3H/4
3H/2
H/8
Y
6H
2H
3H
4:1
1:1– 1:1.5
R
H
P
3H/4
3H/4
3H/4
3H/4
H/2
H/2
3H
H
B-4.5H
H/4
B
L+H/2